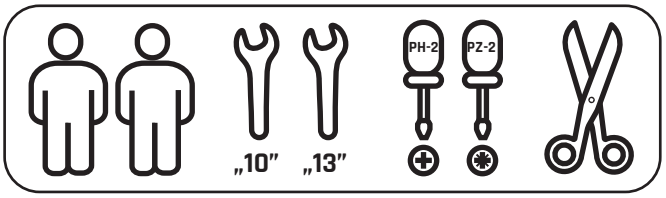

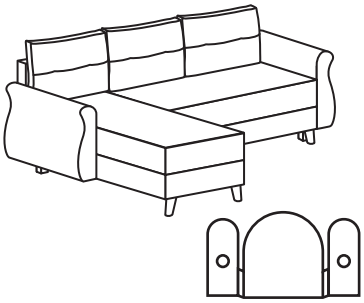

A
4 pcs.

PZ-2

B - M6 x 30mm
8 pcs.

C - M6
8 pcs.

E -M8
6 pcs.

D - M6
8 pcs.

F - M8
6 pcs.

G - M8 x 60mm
6 pcs.

PH-2

H - 3,9 x 25mm
6 pcs.

i
4 pcs.

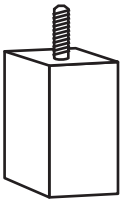

J
6 pcs.

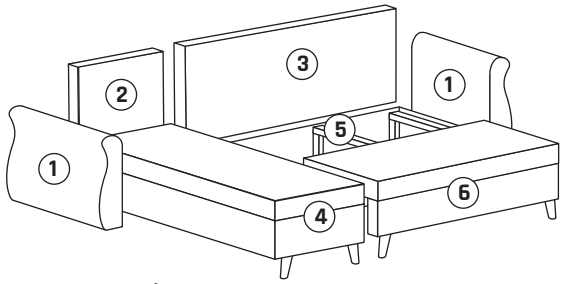

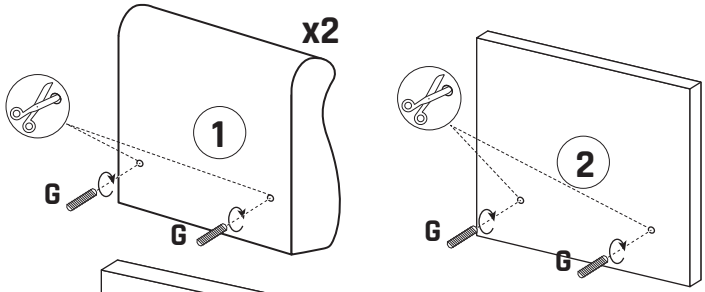

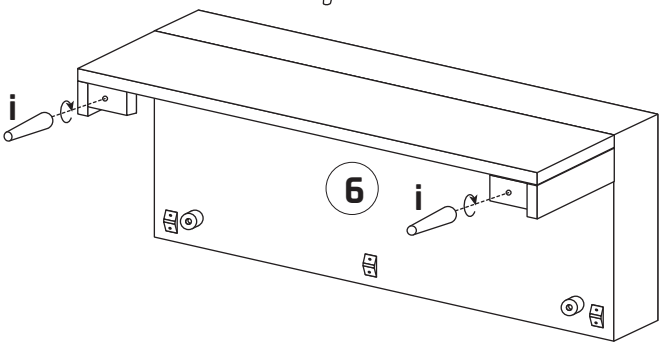

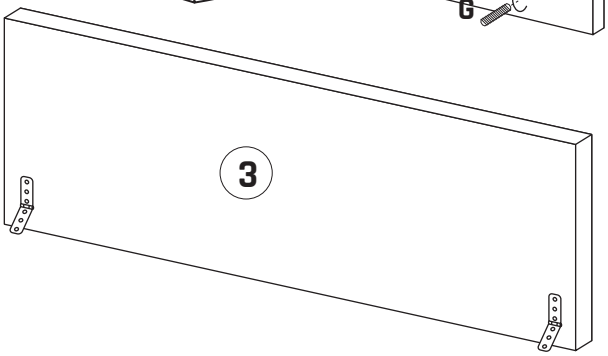

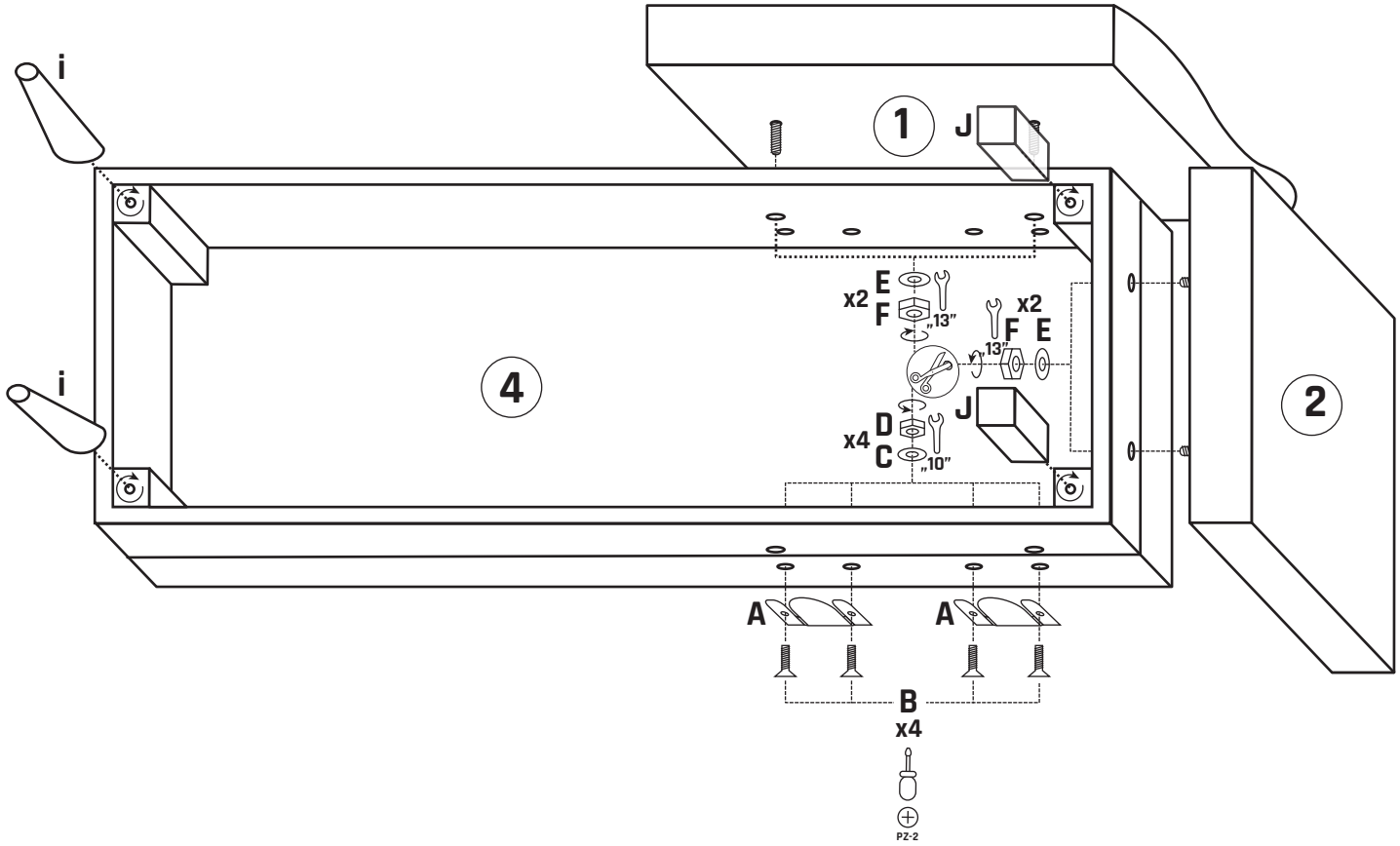

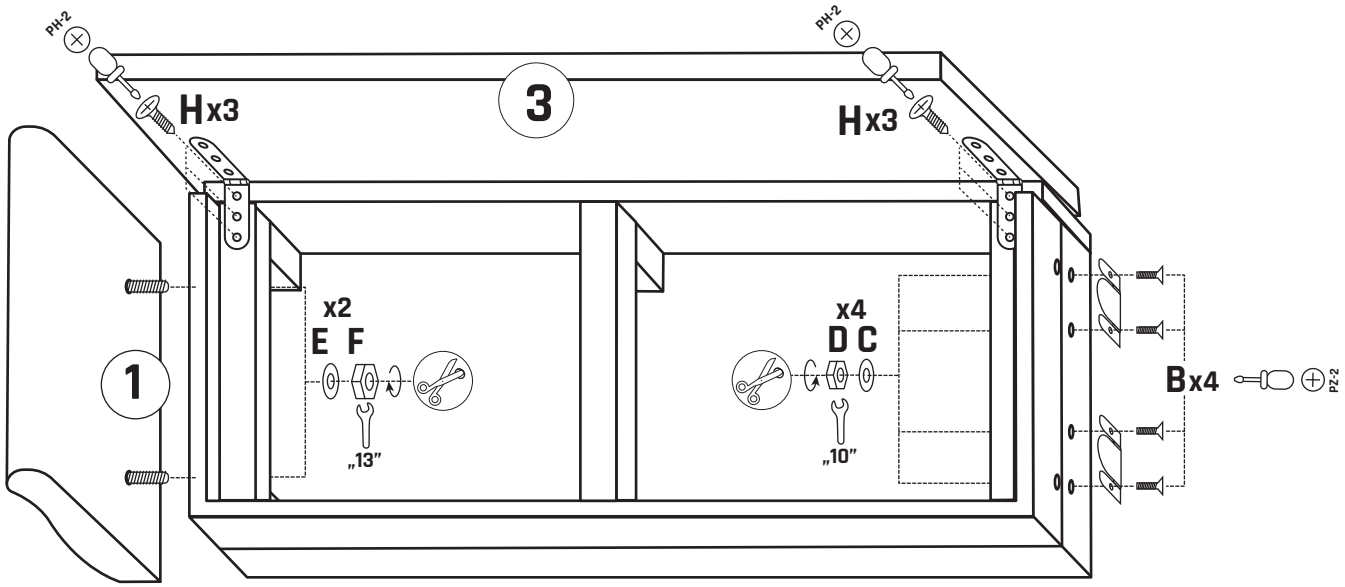
PH-2
PH-2
Hx3
3
Hx3
1
x2
E F
„13”
x4
D C
„10”
Bx4
PZ-2

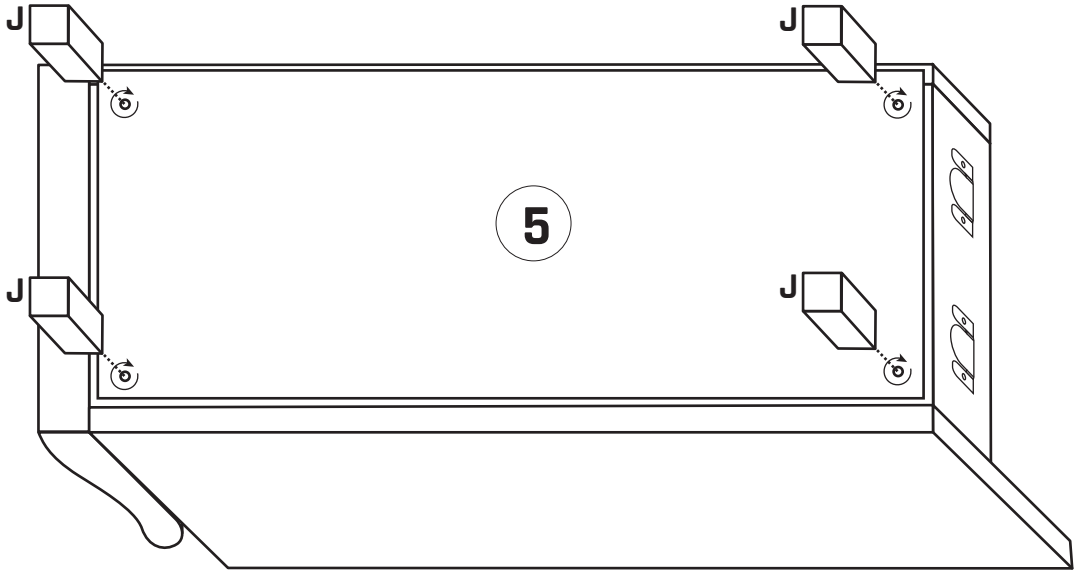
J
J
5
J
J

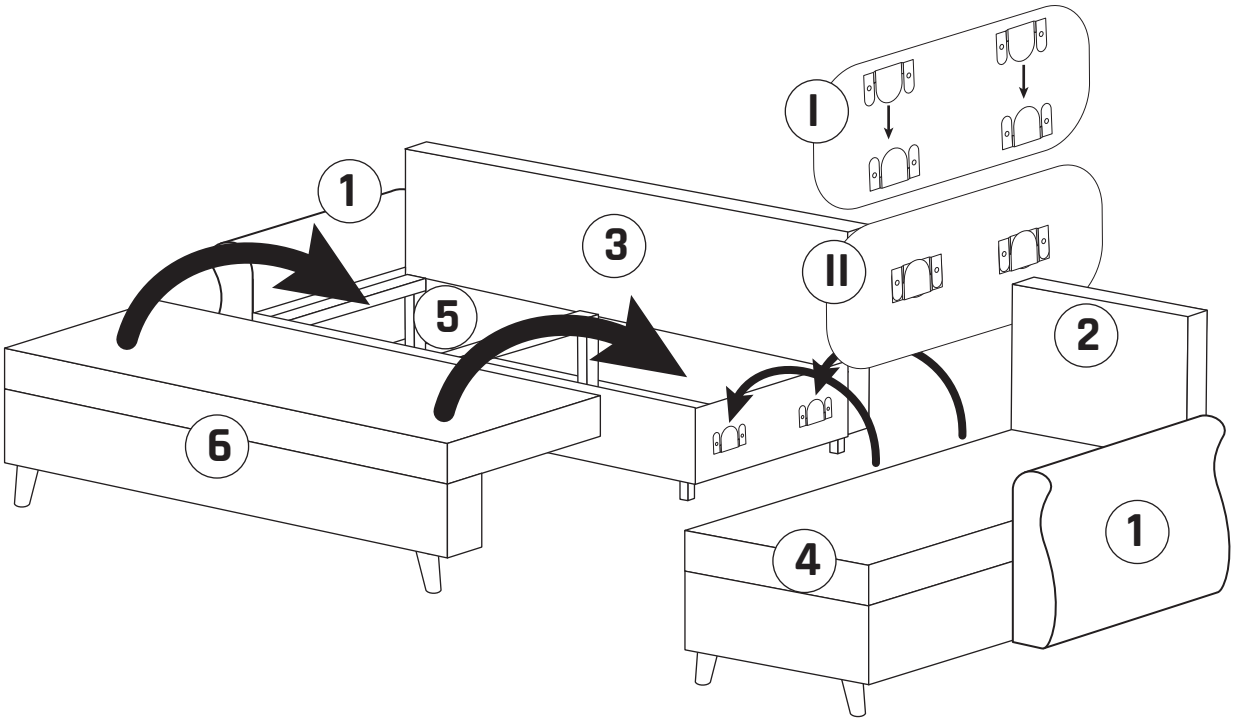
I
1
3
II
5
2
6
4
1